DATEN
COMPUTADORES

ILUSTRÍSSIMO SENHOR PREGOEIRO DA FUNDAÇÃO DE APOIO AO HEMOSC E CEPON – FAHECE, E COLENDA EQUIPE DE APOIO

Pregão Presencial nº 001/2015

DATEN TECNOLOGIA LTDA., pessoa jurídica de direito privado, com sede à Rodovia Ilhéus – Uruçuca, Km 3,5, S/N, Galpão, Distrito Industrial de Ilhéus, Ilhéus/BA, inscrita no CNPJ sob o nº 04.602.789/0001-01, vem respeitosamente perante V.Sa., através do seu representante legal *infra* assinado, apresentar suas

CONTRARRAZÕES

contra o recurso interposto pela empresa **ILHA SERVICE SERVIÇOS DE INFORMÁTICA LTDA.**, denominada simplesmente de Recorrente no curso da licitação em epígrafe.

Requer, desta forma, o processamento da presente contrarrazão e o indeferimento do quanto alegado pela empresa Recorrente.

RAZÕES DO CONTRA-RECURSO CONTRA A RECORRENTE: ILHA SERVICE SERVIÇOS DE INFORMÁTICA LTDA.

DOS FATOS:

1. No dia 27 de janeiro de 2015, a Daten Tecnologia Ltda., doravante denominada DATEN, participou da licitação epigrafada, objetivando a aquisição

de 350 Microcomputadores, tendo apresentado o menor valor para o Item 01, e consequentemente, tendo sido declarada arrematante.

2. Inconformada com a acertada decisão a Recorrente interpôs Recurso valendo-se de argumentos que, restará provado, são insuficientes para ensejar qualquer alteração no resultado do Pregão Presencial nº 001/2015.

3. Em suma, a Recorrente afirma que a DATEN deveria ter sido desclassificada por ter apresentado em sua Proposta um descritivo de Gravador DVD-RW SATA inferior ao quanto exigido pelo Edital, como pode ser depreendido após a leitura de sua peça recursal.

4. A Recorrente, em suas razões, valeu-se de informação INCORRETA para, de maneira infeliz, tentar induzir esta d. Comissão ao erro. Senão vejamos:

5. Da leitura da pág. 17, do Edital, é possível se verificar que o **"Gravador DVDR-W SATA II Dual Layer"** é relacionado como uma das exigências a serem atendidas de maneira a compor o objeto licitado. A Proposta apresentada pela DATEN indica, mais precisamente na pág. 02, aba "Opções de Mídias Removíveis", do catálogo "Desktop DC1C-T / DC1C-S", que o componente ofertado é o **"DVD-RW dual layer interno, padrão SATA"** sendo, assim, condizente com as determinações editalícias.

6. Ademais, a fim de sepultar quaisquer outros questionamentos a respeito deste tópico, vale dizer que, da leitura da pág. 15 do catálogo do supracitado **"DVD-RW dual layer interno, padrão SATA"** (Anexo 01), pode-se absorver a ideia de que, o "SATA Interface" descrito é o **"Serial ATA 3.0"**. Este componente, além de suprir as necessidades deste estimado Órgão, ainda supera as expectativas, por ser de uma qualidade superior àquela solicitada e, desta forma, representar um verdadeiro benefício à Administração.

7. É notório, portanto, que o quanto alegado pela Recorrente não encontra

razão de ser, uma vez que, da simples verificação do citado catálogo (Anexo 01) é possível apreender a noção de que o componente ofertado pela DATEN atende às exigências editalícias e é ainda, comprovadamente, superior àquele pedido pelo Edital o que, indubitavelmente, reflete-se em uma oferta para melhor.

8. Ora, se o real interesse da Recorrente ao manifestar sua intenção de recorrer fosse, de fato, apresentar argumentos consistentes que, eventualmente, pudessem ensejar uma revisão do processo licitatório a mesma deveria ter pautado suas razões em ocorrências mais contundentes. Com a devida vênia, este tipo de ação, perpetrada com fulcro em informações desencontradas, deve ser desconsiderada prontamente, por ter como único escopo a procrastinação de um procedimento legal eivado de boa-fé.

9. A DATEN apresentou as comprovações aqui tratadas como objeto do Recurso interposto pela Recorrente, o que torna inconteste a conclusão de que, valendo-se de fracos argumentos, a ILHA SERVICE SERVIÇOS DE INFORMÁTICA LTDA. tem como única intenção, ao se utilizar deste expediente, conturbar o certame e postergar a inevitável adjudicação do Item nº 01, do Pregão Presencial nº 001/2015.

10. Valer-se de tais argumentos, de modo a, exclusivamente, procrastinar o procedimento licitatório, constitui-se em ato de deslealdade para com as partes envolvidas no processo licitatório, além de ser retumbante afronta ao princípio basilar da isonomia – protegido pelo artigo 3º, da Lei nº 8.666/93, que assim estipula:

> ***"Art. 3º A licitação destina-se a garantir a observância do princípio constitucional da isonomia, a seleção da proposta mais vantajosa para a administração e a promoção do desenvolvimento nacional***

sustentável e será processada e julgada em estrita conformidade com os princípios básicos da legalidade, da impessoalidade, da moralidade, da igualdade, da publicidade, da probidade administrativa, da vinculação ao instrumento convocatório, do julgamento objetivo e dos que lhes são correlatos.".

11. Por tudo o que foi exposto resta comprovado, de maneira inquestionável, que as alegações da Recorrente devem ser desconsideradas, uma vez que a DATEN atende, em sua inteireza, aos mandamentos editalícios do pregão em epígrafe, tendo apresentado provas conclusivas para tal, tanto na proposta comercial, quanto nos catálogos apresentados.

DO PEDIDO:

Diante do exposto e, mais uma vez, reiterando as suas argumentações completamente fundamentadas no que é a mais pura expressão da verdade, acredita a DATEN que a Recorrente se utilizou de subsídios infundados para, num ato de total desespero, postergar o Ato de Adjudicação do Item nº 01 do certame epigrafado e crê, com veemência, que a sua proposta, além de ser a mais vantajosa, financeiramente, para a Administração, também atende, plenamente, às exigências do Edital; por isso, requer que o Recurso interposto pela empresa ILHA SERVICE SERVIÇOS DE INFORMÁTICA LTDA. seja julgado como totalmente **IMPROCEDENTE**, acreditando estar assim esta d. Comissão agindo no mais puro ato de **JUSTIÇA!**

DATEN
COMPUTADORES

Nestes Termos,

Pede Deferimento.

São José/SC, 04 de fevereiro de 2015.

DATEN TECNOLOGIA LTDA.

Eduardo Hammes

Eduardo Hammes
CREA-SC:120201-1

Representante

SALVADOR
Rua Frederico Simões, 125
Ed. Liz Empresarial, 6º andar, Sala 602
Caminho das Árvores
Salvador / BA - CEP: 41820-774
Tel.: + 55 71 3616.5500

ILHÉUS
Rodovia Ilhéus - Uruçuca Km 3,5
S/N - Distrito Industrial Iguape
Ilhéus / BA - CEP: 45658-335
Tel.: +55 73 3222.6222

SÃO PAULO
Rua Quintana, 887 - Conjunto. 54
Brooklin Novo
São Paulo / SP - CEP: 04569-011
Tel.: +55 11 5505.0401

Registration NO

Preliminary
SPECIFICATIONS
FOR REWRITABLE DVD DRIVE

DATE OF ISSUE: April 10, 2014

MODEL : SW840

Rev 0.50

RECEIVED
Date:

Do not disclose this document to any third party.
This document, whether wholly or partially, may not be reprinted or reproduced without the prior written consent of PPRD.

Comment : Our trademark "Panasonic" shall not be printed on any products according to our mutual consultation between customer and Panasonic

Panasonic Precision Devices Co., Ltd

1080 TAKANO NAGOMI-MACHI
TAMANA-GUN KUMAMOTO .JAPAN
TEL 0968-86-4321

Approve	Check				Design
(Engineer)	(Sales)	(Planning)	(QA)	(Legal)	

History

Parts No.: (PPRD) SW840
(Customer):

Spec Rev.	ECN Number	Date	F/W Version	H/W Version	Phase in	Comments
0.50	N/A	2014/04/10	1.00	1.00	1st Production	

TABLE OF CONTENTS

1 INTRODUCTION 5

2 PHYSICAL SPECIFICATIONS 8

2.1 DIMENSION 8
2.2 WEIGHT 8
2.3 FRONT PANEL 8
2.4 REAR PANEL 8
2.5 INSTALLATION 8
2.6 MOUNTING ORIENTATION 8
2.7 MOUNTING SCREWS 8

3 PERFORMANCE 9

3.1 APPLICABLE DVD FORMATS 9
3.2 APPLICABLE CD FORMATS 9
3.3 DISC DIAMETER 9
3.4 WRITING SOFTWARE SUPPORT 9
3.5 DISC CAPACITY 10
3.6 DATA BUFFER 10
3.7 ROTATIONAL SPEED FOR READ\WRITE 10
3.8 WRITE METHOD FOR DVD 11
3.9 WRITE METHOD FOR CD 11
3.10 BURST DATA TRANSFER RATE 11
3.11 SUSTAINED DATA TRANSFER RATE 12
3.12 SPIN UP TIME 12
3.13 ACCESS TIME 12
3.14 CD-DA PLAYABILITY (DIGITAL PLAYBACK) 12
3.15 CD-ROM READABILITY 12
3.16 DVD-ROM READABILITY & DVD-VIDEO PLAYABILITY 13
3.17 DVD-RAM READABILITY 13
3.18 UNBALANCE MEDIA 13

4 ELECTRICAL CHARACTERISTICS 14

4.1 POWER SUPPLY 14
4.2 CURRENT AND POWER CONSUMPTION 14

5 INTERFACE 15

5.1 SATA INTERFACE 15
5.2 CONNECTOR 15
5.3 SATA DEVICE PLUG CONNECTOR PIN DEFINITION 15
5.4 POWER CONNECTOR 16
5.5 ATAPI COMMAND SET 17
5.6 ATA COMMAND SET 17
5.7 GENERAL ELECTRICAL SPECIFICATIONS 18

6 RELIABILITY 24

6.1 ERROR RATE 24
6.2 MTBF 24
6.3 MTTR 24
6.4 TRAY OPEN / CLOSE 24
6.5 ACTUATOR MECHANISM 24

7 ENVIRONMENTAL CONDITIONS 25

7.1 TEMPERATURE 25
7.2 TEMP. GRADIENT 25
7.3 HUMIDITY 25
7.4 VIBRATION AND SHOCK 25
7.5 DROP 25
7.6 TRANSPORTATION 25
7.7 ESD 26

7.8 ACOUSTIC NOISE 26
7.9 SELF-VIBRATION 26

8 AGENCY CERTIFICATES 27

9 LABEL 28

9.1 DRIVE LABELS 28
9.2 CARTON LABELS 29

10 SHIPPING CONDITIONS 30

10.1 CARTON BOX 30
10.2 SHIPPING PALLET 31

11 INFORMATION FOR LASER 32

12 ANNEX 32

12.1 ANNEX A - OUTLINE DIMENSIONS (UNIT: MM) 33
12.2 ANNEX B – LABEL 34

1 INTRODUCTION

This document describes the engineering specifications of the drive stated on the top cover page as "MODEL", (hereinafter "Drive"). The Drive is a Half-High internal type and an ATAPI/SATA interface DVD/CD recordable drive. The drive is able to write DVD+/-R/RW/RAM and CD-R/RW discs. The Drive supports 16X speed DVD+R disc writing, 8X speed DVD+RW disc writing, 8X speed DVD+R DL (Dual Layer) disc writing, 16X speed DVD-R disc writing, 6X speed DVD-RW disc writing, 8X speed DVD-R DL (Dual Layer) disc writing, 12X DVD-RAM disc writing, 16X speed DVD-ROM disc reading, 48X speed CD-R disc writing, 24X speed CD-RW disc writing and 48X speed CD-ROM disc reading capabilities. Furthermore, the Drive supports all writing methods specified in industry standards and the functions of writing conform to them.

The general features of the Drive are as follows:

(1) Half-height, Tray-load Type DVD/CD Drive

(2) Support 12 cm / 8 cm Disc

(3) 16X (21.12 Mbytes/sec, DVD) / 48X (7,200 Kbytes/sec, CD) Data Transfer Rate

(4) 16X DVD+R / 8X DVD+RW / 8X DVD+R DL / 16X DVD-R / 6X DVD-RW / 8 X DVD-R DL / 12X DVD-RAM Disc writing Speed

(5) Support Disc at once, Multi-Session, Sequential Recording (DVD+R Single & Double Layer), Sequential Recording, Random Recording (DVD+RW), Disc at once, incremental write (DVD-R Single), Disc at once, Sequential Recording, Layer Jump recording (DVD-R Double Layer) / Disc at once, incremental write, restricted overwrite (DVD-RW) / DVD-Video for DVD

(6) 48X CD-R / 24X CD-RW Disc writing Speed / 48X CD-ROM Reading speed

(7) Support Disc-At-Once (DAO) / Session-At-Once (SAO) / Track-At-Once (TAO) / Fixed & Variable Packet Writing for CD

(8) SATA/ATAPI interface (compliant to ATA/ATAPI-8)

(9) DVD-ROM (DVD-5, DVD-9, DVD-10, DVD-18), DVD-R, DVD-RW, DVD+R, DVD+R DL, DVD+RW, DVD-R DL, DVD-RAM, CD-DA, CD-ROM/XA, CD-i, Karaoke CD, Video CD, Multi-session Photo CD, Enhanced CD, i-trax CD, CD extra, CD Plus, CD-Text, CD-R and CD-RW Discs Compliant

(10) Support Windows 2000, Windows XP X86/X64, Windows Server 2003 X86/X64, Windows Vista X86/X64, Windows 7 X86/X64, Windows Server 2008 X86/X64

(11) MPC level 3 compliant

(12) MMC6 / Mt. Fuji Command compliant (SFF-8090 Rev. 8.0 v 1.00)

(13) Supports device type of Serial-ATA interconnections for Gen 1 operation at 1.5Gbps

(14) Certification of "Microsoft® Windows® Logo Program".(WHQL)

(15) CSS (Content Scramble System) supported

(16) RPC II (Regional Playback Control Phase II) supported

(17) Motorized Tray Type Automatic Load

(18) Electrical Button / Software / Emergency Ejection

(19) MTBF 150,000 POH

(20) Support Ultra DMA mode 5, and PIO mode 4.

(21) Power Saving Feature

(22) Flash ROM supports On Line Programming Capability

(23) CPRM Playback (Optional)

(24) CPRM Write support (Compatible with Cyberlink PowerProduct CPRM version) (Optional)[i]
(25) VCPS Playback ready(Optional)
(26) DVD-Download (DVD-R CSS, Qflix) playback.

[i] Cyberlink PowerProduct CPRM version support DVD-RW,DVD-RAM CPRM write.

Figure 1. Block Diagram

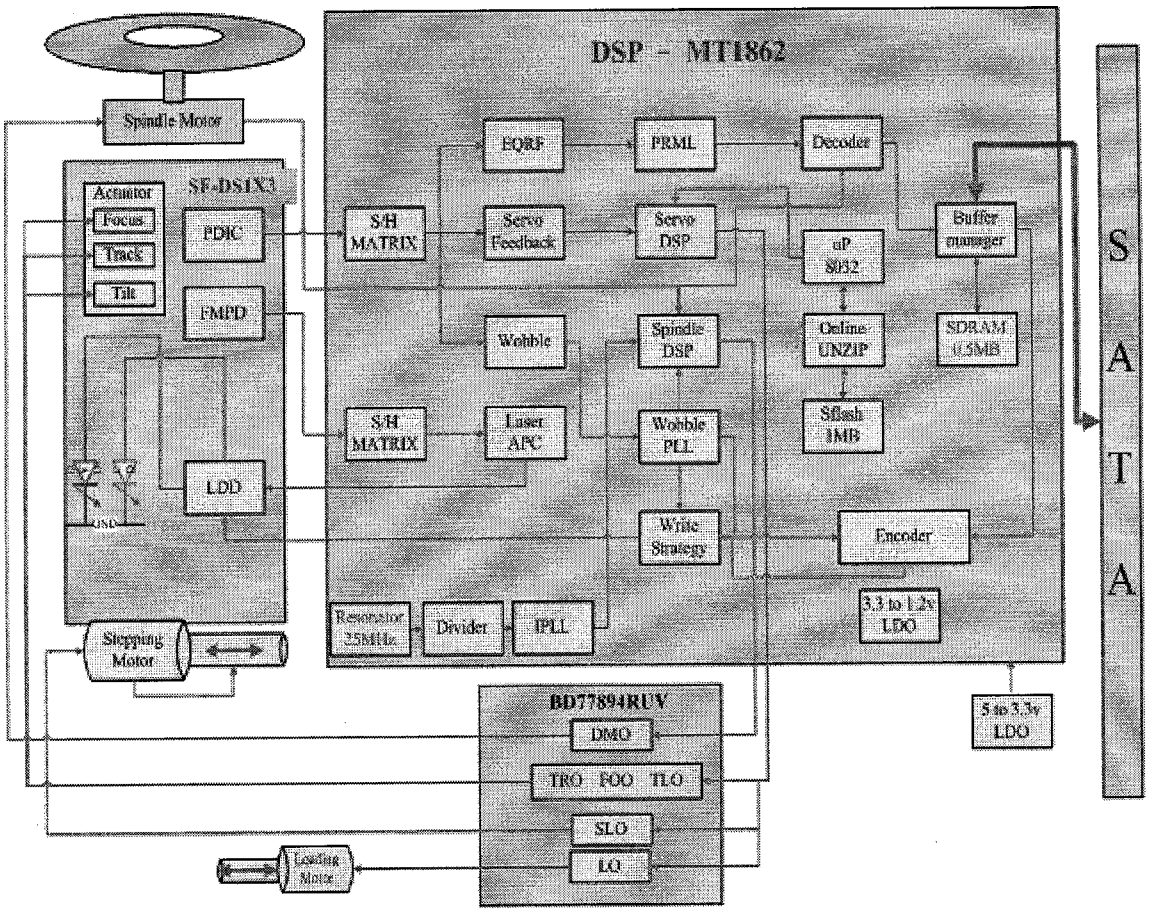

2 PHYSICAL SPECIFICATIONS

2.1 Dimension
148.0 x 42.2 x 170 mm (with bezel) (W*H*D), see Annex A.

2.2 Weight
630 +/- 15 g (with bezel)

2.3 Front Panel
Ejection button
Emergency eject pin hole
Power on / Busy LED indicator (Green LED)

2.4 Rear Panel
SATA interface connector (22 Pins)

2.5 Installation
Horizontal & Vertical, Motorized Tray-type loading

2.6 Mounting Orientation
+/-15degree (Front to Back / Left to Right)

2.7 Mounting screws

Left side	4-M3 screw holes
Right side	4-M3 screw holes
Bottom side	4-M3 screw holes

3 PERFORMANCE

3.1 Applicable DVD Formats

DISC Format	Write	Read	Comments
DVD (DVD-5; Single layer, Single side 4.7GB)	N/A	Y	Data/Video
DVD (DVD-9; Dual layer, Single side 8.54GB)	N/A	Y	Data/Video
DVD (DVD-10; Single layer, Dual side 9.4GB)	N/A	Y	Data/Video
DVD (DVD-18; Dual layer, Dual side 17.09GB)	N/A	Y	Data/Video
DVD-R Ver.1.0 (for authoring 3.95GB)	N	Y	
DVD-R Ver.2.0 (for authoring 4.7GB)	N	Y	
DVD-R Ver.2.0 (for general 4.7GB)	Y	Y	Multi-Border support
DVD-R DL (Dual Layer) Ver.3.0 (8.54Gbytes)	Y(*1)	Y	Multi-Border support
DVD Download CSS Managed Recording Ver1.0	Option	Y	
DVD-RW Ver.1.0, 1.1 and 1.2	Y	Y	Multi-Border support
DVD+R Ver.1.3	Y	Y	Multi-Session support
DVD+R-DL (Double Layer) Ver1.0 and 1.1 (8.54Gbytes)	Y(*1)	Y	Multi-Border support
DVD+RW Ver.1.3	Y	Y	Multi-Session support
DVD+RW high speed Ver. 1.0	Y	Y	Multi-Session support
DVD-RAM Ver.1.0	N	Y	
DVD-RAM Ver.2.0 and 2.1 and 2.2	Y	Y	
DVD-RAM Ver.2.2[RAM2(Class 1)	N	Y	
DVD-Audio	N	Y(*2)	
SACD (Hybrid)	N	Y	CD side support

Note: (*1) Recording Software's support is required.
(*2) Playback Software's support is required.

3.2 Applicable CD Formats

DISC Format	Write	Read	Comments
CD-ROM Mode1	N/A	Y	
CD-ROM XA Mode2 (form 1, form2)	N/A	Y	
Photo CD (single and multiple session)	Y(*1)	Y	
Video CD	Y(*1)	Y	
CD-DA (CD Audio)	Y(*1)	Y	
CD-Extra	Y(*1)	Y	
Mixed-CD	Y(*1)	Y	
CD-Text	Y(*1)	Y	
CD-R	Y	Y	
CD-RW (Supports AM2)	Y	Y	
HS CD-RW (Supports AM2)	Y	Y	
US CD-RW (Supports AM2)	Y	Y	

Note: (*1) Recording Software's support is required.

3.3 Disc Diameter

12cm and 8cm disc for Read / Write

3.4 Writing Software Support

Sonic-Roxio (Easy Media Creator, Drag to Disc, MyDVD, DVD it!).
Nero (Nero burning Rom & InCD),
NTI (Media Maker),
Cyberlink (Power2Go & InstantBurn).

3.5 Disc Capacity

2,048 bytes/block (DVD)
2,048 bytes/block (CD Mode-1 and Mode-2 Form-1)
2,328 bytes/block (Mode-2 Form-2)
2,336 bytes/block (Mode-2)
2,352 bytes/block (CD-DA)

3.6 Data Buffer

0.5 MB

3.7 Rotational Speed for Read\Write

CD-ROM Type		
Media Type	Support Read Speed (Typical)	
CD-ROM,	9,600 rpm (20.7X ~ 48X CAV), 8,100 rpm (17.25X ~ 40X CAV), 6,480 rpm (13.8X ~ 32X CAV), 4,860 rpm (10.5X ~ 24X CAV), 3,200 rpm (7.0X ~ 16X CAV), 2,000 rpm (4.3X ~ 10.1X CAV)	
CD-DA (DAE), Video CD (Copy)	8,100 rpm (17.25X ~ 40X CAV), 6,480 rpm (13.8X ~ 32X CAV), 4,860 rpm (10.5X ~ 24X CAV), 3,200 rpm (7.0X ~ 16X CAV), 2,000 rpm (4.3X ~ 10.1X CAV)	
CD-DA,(Playback), Video CD (Playback)	2,000 rpm (4.3X ~ 10.1X CAV)	

CD recordable Type		
Media Type	Support Read Speed (Typical)	Support Write Speed (Typical)
CD-R	9,600 rpm (20.7X ~ 48X CAV), 8,100 rpm (17.25X ~ 40X CAV), 6,480 rpm (13.8X ~ 32X CAV), 4,900 rpm (10.5X ~ 24X CAV), 3,200 rpm (7.0X ~ 16X CAV), 2,000 rpm (4.3X ~ 10.1X CAV)	48X CAV (20.7X ~48X), 40X P-CAV (20.7X ~40X), 32X P-CAV (17.9X ~32X), 24X P-CAV (17.9X ~24X), 16X CLV, 8X CLV
Multi Speed CD-RW	8,100 rpm (17.25X ~ 40X CAV), 6,480 rpm (13.8X ~ 32X CAV), 4,900 rpm (10.5X ~ 24X CAV), 3,200 rpm (7.0X ~ 16X CAV), 2,000 rpm (4.3X ~ 10.1X CAV)	4X CLV
High Speed CD-RW		4X/10X CLV
Ultra Speed CD-RW		16X/24X Zone- CLV, 16X CLV 10X CLV

DVD-ROM Type		
Media Type	Support Read Speed (Typical)	
DVD-5 (Single Layer)	9,360 rpm (6.7X ~ 16X CAV), 8,200 rpm (5.7X ~ 14X CAV), 7,050 rpm (4.9X ~ 12X CAV), 5,900 rpm (4.1X ~ 10X CAV) , 4,750 rpm (3.3X ~ 8.1X CAV), 3,600 rpm (2.6X ~ 6.2X CAV), 2,350 rpm (1.7X ~ 4.2X CAV)	
DVD-9 (Dual Layer)	5,200 rpm (3.4X ~ 8.0X CAV), 4,000 rpm (2.6X ~ 6.2X CAV), 2,600 rpm (1.7X ~ 4.2X CAV)	
DVD-5 (with CSS)	2,350 rpm (1.7X ~ 4.2X CAV)	
DVD-9 (with CSS)	2,600 rpm (1.7X ~ 4.2X CAV)	

DVD recordable Type		
Media Type	Support Read Speed (Typical)	Support Write Speed (Typical)
DVD-R	9,360 rpm (6.7X ~ 16X CAV), 8,200 rpm (5.7X ~ 14X CAV), 7,050 rpm (4.9X ~ 12X CAV), 5,900 rpm (4.1X ~ 10X CAV) , 4,750 rpm (3.3X ~ 8.1X CAV), 3,600 rpm (2.6X ~ 6.2X CAV), 2,350 rpm (1.7X ~ 4.2X CAV)	12X / 16X CAV, 8X P-CAV, 2X , 4X , 6X CLV
DVD+R		12X / 16X CAV, 8X P-CAV, 2.4X / 4X / 6X CLV
DVD-R DL	5,200 rpm (3.4X ~ 8.0X CAV), 4,000 rpm (2.6X ~ 6.2X CAV), 2,600 rpm (1.7X ~ 4.2X CAV)	8X P-CAV, 4X, 6X CLV
DVD+R DL		8X P-CAV, 2.4X , 4X , 6X CLV
DVD-RW: 6X Speed Rev.3.0	6,950 rpm (4.8X ~ 12X CAV), 5,900 rpm (4.1X ~ 10X CAV), 4,700 rpm (3.3X ~ 8.1X CAV), 3,600 rpm (2.6X ~ 6.2X CAV), 2,350 rpm (1.7X ~ 4.2X CAV)	6X CLV, 4X CLV
DVD-RW		2X, 4X CLV
DVD+RW (Single Layer, Volume2: 8X Basic Format Spec Ver 1.0)		8X Zone- CLV, 6X CLV
DVD+RW (Single Layer, Volume1: 4X Basic Format Spec Ver 1.3		2.4X, 4X CLV

DVD-RAM Type			
Media Type	Support Read Speed (Typical)	Support Write Speed (Typical)	
		Streaming write	Non-Streaming write
DVD-RAM Ver 2.2 Class 1 (6X~16X Speed)	12X/10X/8X PCAV, 6X CLV	Not Support	
DVD-RAM Ver 2.2 Class 0 (5X Speed)	5X,3X, 2X CLV	5X,3X, 2X CLV	2.3X,1.4X, 0.9X CLV
DVD-RAM Ver 2.2 Class 0 (3X Speed)	3X, 2X CLV	3X, 2X CLV	1.4X, 0.9X CLV
DVD-RAM Ver 2.2 Class 0 (2X Speed)	2X CLV	2x CLV	0.9X CLV
DVD-RAM Ver 2.1 (8cm media)	2x CLV	2x CLV	0.9X CLV
DVD-RAM Ver 1.0 (1X media)	2x CLV		

3.8 Write Method for DVD

Disc at once, Multi-Session, Sequential Recording (DVD+R Single & Double Layer),
Sequential Recording, Random Recording (DVD+RW),
Disc at once, incremental write (DVD-R Single),
Disc at once, Sequential Recording, Layer Jump recording (DVD-R Double Layer) ,
Disc at once, incremental write, restricted overwrite (DVD-RW),
DVD-Video for DVD.

3.9 Write Method for CD

Disc-At-Once (DAO),
Session-At-Once (SAO),
Track-At-Once (TAO)
Packet Writing

3.10 Burst Data Transfer Rate

SATA GEN 1 1.5Gbit/sec
DMA/PIO Support

3.11 Sustained Data Transfer Rate

		Min.	Typical	Max.	Cpk
DVD-ROM outside[ii]	(KB/sec)		21,632		1.33
DVD-ROM inside[iii]	(KB/sec)		7,007		1.33
CD-ROM outside[iv]	(KB/sec)		7,200		1.33
CD-ROM inside[v]	(KB/sec)		3,105		1.33

3.12 Spin up Time

		Min.	Typical	Max.	Cpk
Spin up	(sec)		4.0	6.0	1.33

Note: Focus search time and disc motor start up time.

3.13 Access Time

		Min.	Typical		Cpk
DVD-ROM SL Random Access[vi]	(ms)		120		1.33
DVD-ROM SL Full Stroke[vii]	(ms)		240		1.33
DVD-RAM Random Access[viii]	(ms)		150		1.33
DVD-RAM Full Stroke[ix]	(ms)		300		1.33
CD-ROM Random Access[x]	(ms)		100		1.33
CD-ROM Full Stroke[xi]	(ms)		200		1.33

3.14 CD-DA Playability (Digital playback)

		Min.	Typical	Distribution
Eccentric	(μm)	210	280	
Scratch	(mm)	2.2	2.6	
Interruption	(mm)	0.8	1.0	
Black Dot	(mm)	0.8	1.0	
Fingerprint	(μm)	65	75	
Vertical Deviation	(mm)	0.8	1.0	

Note: No audio discontinuity in the above tests.

3.15 CD-ROM Readability

		Min.	Typical	Distribution
Eccentric	(μm)	210	280	operate at reduced speed
Scratch	(mm)	1.2	1.6	
Black Dot	(mm)	0.8	1.0	
Fingerprint	(μm)	65	75	
Vertical Deviation	(mm)	0.8	1.0	operate at reduced speed

Note: No read error in the above tests.

---

ii Test disc: ABEX TDR-820 @ LBA 228000h
iii Test disc: ABEX TDR-820 @ LBA 0h
iv Test disc: ABEX TCDR-704 @ 75 min 02 sec 00 block
v Test disc: ABEX TCDR-704 @ 00 min 02 sec 00 block
vi It is computed by averaging 200 or more measures of random access time over the whole area of the media from LBA 0h to LBA 1E7725h, including latency and error correction time. [Test Disc: ABEX TDR-820]
vii It is computed by averaging 200 or more measures of the access time from LBA 0h to LBA 1E7725h, including latency and error correction time. [Test Disc: ABEX TDR-820]
viii It is computed by averaging 200 or more measures of random access time over the whole area of the media from LBA 0h to LBA 1E7725h, including latency and error correction time. [Test Disc: 5X Speed DVD-RAM media]
ix It is computed by averaging 200 or more measures of the access time from LBA 0h to LBA 1E7725h, including latency and error correction time. [Test Disc: ABEX TDV-RA520CW]
x It is computed by averaging 200 or more measures of random access time over the whole area of the media from 0 min 02 sec 00 block to 60 min 01 sec 74 block, including latency and error correction time. [Test Disc: ABEX TCDR-704]
xi It is computed by averaging 200 or more measures of the access time from 0 min 02 sec 00 block to 60 min 01 sec 74 block, including latency and error correction time. [Test Disc: ABEX TCDR-704]

3.16 DVD-ROM Readability & DVD-Video Playability

		Min.	Typical	Distribution
Eccentric	(μm)	100	150	operate at reduced speed
Scratch	(mm)	2.6	3.0	
Black Dot	(mm)	0.8	1.0	
Fingerprint	(μm)	65	75	
Vertical Deviation	(mm)	0.8	1.0	operate at reduced speed

Note: For Data Disc, No read error in the above tests.
For DVD Video, should be slow down the rotational speed to conserve power, no excess vibration and noise is occurred.

3.17 DVD-RAM Readability

		Min.	Typical	Distribution
Eccentric	(μm)	100	150	operate at reduced speed
Scratch	(mm)	2.6	3.0	
Black Dot	(mm)	0.8	1.0	
Fingerprint	(μm)	65	75	
Vertical Deviation	(mm)	0.6	0.8	operate at reduced speed

Note: No read error in the above tests.

3.18 Unbalance media

	Behavior	CD\DVD\Media	Distribution
Imbalance Level	Full speed operation	≤ 2.5 g·mm[xii]	≥ 90 % full speed
	Reduced speed operation DVD 6X, CD 16X	= 5 g·mm[xiii]	≥ 70 % spin down
	Reduced speed operation DVD 6X, CD 16X	≥ 10 g·mm[xiv]	≥ 100 % spin down

[xii] ABEX SCD-3228(CD), SVD-4133 (DVD-5),
[xiii] ABEX TCD-778(CD), SVD-4131 (DVD-5),
[xiv] ABEX SCD-3442(CD), SVD-4126 (DVD-5),

4 ELECTRICAL CHARACTERISTICS

4.1 Power Supply

Normal DC Input Voltage	+5V	+12V
Voltage Allowance	+/- 5%	+/- 10%
Ripple Voltage	300 mVp-p	500 mVp-p
Noise frequency	10Hz ~ 10 MHz	

4.2 Current and Power Consumption

Conditions			+5V Current (mA)	+12V Current (mA)	Power Consumption (W)
Sleep	DIPM/HIPM ON	(AVG)	140	0.4	0.70
	DIPM/HIPM OFF	(AVG)	170	0.4	0.85
Standby	DIPM/HIPM ON	(AVG)	170	0.4	0.85
	DIPM/HIPM OFF	(AVG)	200	0.4	1.00
Idle		(AVG)	600	120	2.00
Sequential Read	CD-ROM	(AVG)	750(TBD)	800(TBD)	13.50(TBD)
	DVD-ROM	(AVG)	750(TBD)	800(TBD)	13.50(TBD)
Random Access[xv]	CD-ROM	(AVG)	650(TBD)	800(TBD)	12.80(TBD)
	DVD-ROM	(AVG)	650(TBD)	800(TBD)	12.80(TBD)
Write	CD write	(AVG)	800(TBD)	800(TBD)	13.60(TBD)
	DVD write	(AVG)	800(TBD)	800(TBD)	13.60(TBD)
Startup		(Peak)	1200	1450	--
Eject		(Peak)	700	300	--

Note: CD test disc is CD-R 48X write; DVD test disc is 16X DVD+R
Not include spike current[xvi] for above items.

[xv] 100% duty random access
[xvi] Spike current: Less than 1ms width current.

5 INTERFACE

5.1 SATA Interface

The drive shall conform to the interface signal levels and termination requirements of the Serial ATA 3.0 specification.
In addition, certain optional features of the Serial ATA specification 3.0 must be supported, as indicated in the table below.

Feature	Support Requirement	
DIPM (Device Initiated link Power Management)	Support	Partial timer : 10ms Slumber timer : 80ms
HIPM (Host Initiated link Power Management)	Support	
Asynchronous signal recovery	Support	
SSC (Spread Spectrum Clocking)	Support	Follow Host SSC
Software Settings Preservation	Support	
Phy Event Counter	Support	
COMRESET treatment during SSP active	same as software reset	

5.2 Connector

Integrated 22 pin connector

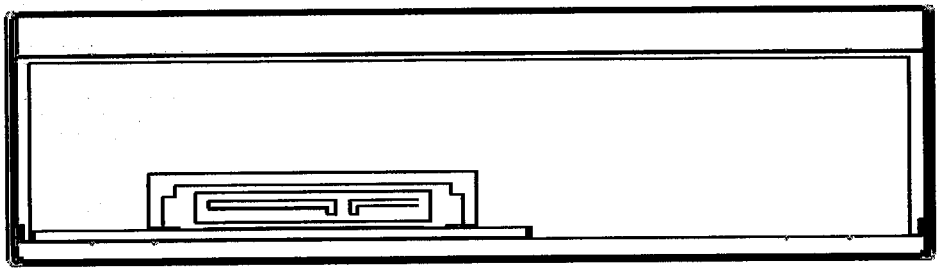

5.3 SATA Device plug connector pin definition

	PIN	Type	Description
Signal Segment Key			
Signal Segment	S1	GND	
	S2	A+	Differential signal pair from host controller
	S3	A-	
	S4	GND	
	S5	B-	Differential signal pair to host controller
	S6	B+	
	S7	GND	

5.4 Power Connector

	PIN	Type	Description
Power Segment Key			
Power Segment	P1	V3.3	3.3 V Power (Not used)
	P2	V3.3	3.3 V Power (Not used)
	P3	V3.3	3.3 V Power (Not used)
	P4	GND	
	P5	GND	
	P6	GND	
	P7	V5	5 V Power
	P8	V5	5 V Power
	P9	V5	5 V Power
	P10	GND	
	P11	DAS/DSS	Device Activity Signal / Disable Staggered Spin-up (Not used)
	P12	GND	
	P13	V12	12 V Power
	P14	V12	12 V Power
	P15	V12	12 V Power

NOTE:
1. All pins are in a single row with 1.00 mm (.039") pitch on the power segment portion.

5.5 ATAPI Command Set

Code	Command	Code	Command
00h	TEST UNIT READY	52h	READ TRACK INFORMATION
03h	REQUEST SENSE	53h	RESERVE TRACK
04h	FORMAT UNIT	54h	SEND OPC INFORMATION
12h	INQUIRY	55h	MODE SELECT (10)
1Bh	START / STOP UNIT	58h	REPAIR TRACK
1Eh	PREVENT / ALLOW MEDIUM REMOVAL	5Ah	MODE SENSE (10)
23h	READ FORMAT CAPACITIES	5Bh	CLOSE TRACK / SESSION
25h	READ CAPACITY	5Ch	READ BUFFER CAPACITY
28h	READ (10)	5Dh	SEND CUE SHEET
2Ah	WRITE (10)	A1h	BLANK
2Bh	SEEK	A3h	SEND KEY
2Eh	WRITE AND VERIFY (10)	A4h	REPORT KEY
2Fh	VERIFY (10)	A5h	PLAY AUDIO (12)
35h	SYNC CACHE	A7h	SET READ AHEAD
3Bh	WRITE BUFFER	A8h	READ (12)
3Ch	READ BUFFER	AAh	WRITE (12)
42h	READ SUB-CHANNEL	ACh	GET PERFORMANCE
43h	READ TOC	ADh	READ DISC STRUCTURE
45h	PLAY AUDIO (10)	B6h	SET STREAMING
46h	GET CONFIGURATION	B9h	READ CD MSF
47h	PLAY AUDIO MSF	BBh	SET CD SPEED
4Ah	GET EVENT STATUS NOTIFICATION	BDh	MECHANISM STATUS
4Bh	PAUSE / RESUME	BEh	READ CD
4Eh	STOP PLAY / SCAN	BFh	SEND DISC STRUCTURE
51h	READ DISC INFORMATION		

5.6 ATA Command Set

Code	Command	Code	Command
00h	NOP	E2h	STANDBY
08h	ATAPI SOFT RESET	E3h	IDLE
20h	READ SECTOR	E5h	CHECK POWER MODE
90h	EXECUTE DRIVE DIAGNOSTICS	E6h	SLEEP
A0h	ATAPI PACKET	E7h	FLUSH CACHE
A1h	ATAPI IDENTIFY DEVICE	ECh	IDENTIFY DEVICE
E0h	STANDBY IMMEDIATE	EFh	SET FEATURES
E1h	IDLE IMMEDIATE		

5.7 General Electrical Specifications

Table1 - General Specifications

Parameters	Units	Limit	Electrical Specification						Detail Cross-Ref Section (Serial ATA V. 3.0)	Meas. Cross-Ref Section (Serial ATA V. 3.0)
			Gen1i	Gen1m	Gen1x	Gen2i	Gen2m	Gen2x		
Channel Speed	Gbps	Nom	1.5			3.0			7.2.2.1.1	-
Fbaud	GHz	Nom	1.5			3.0			-	-
FER, Frame Error Rate		Max	8.2e-8 at 95% confidence level			8.2e-8 at 95% confidence level			7.2.2.1.2	7.4.1
T_{UI}, Unit Interval	ps	Min	666.4333			333.2167			7.2.2.1.3	7.4.11
		Nom	666.6667			333.3333				
		Max	670.2333			335.1167				
f_{tol}, TX Frequency Long Term Stability	ppm	Min	-350			-350			7.2.2.1.4	7.4.6
		Max	+350			+350				
f_{SSC}, Spread-Spectrum Modulation Frequency	kHz	Min	30			30			7.2.2.1.5 7.3.3	7.4.11
		Max	33			33				
SSC_{tol}, Spread-Spectrum Modulation Deviation	ppm	Min	-5000			-5000			7.2.2.1.6 7.3.3	7.4.11
		Max	+0			+0				
$V_{cm,dc}$, DC Coupled Common Mode Voltage	mV	Min	200		-	-			7.2.2.1.7	7.4.4
		Nom	250		-	-				
		Max	450		-	-				
$V_{cm,ac\ coupled}$, AC Coupled Common Mode Voltage	mV	Min	0		-	-			7.2.2.1.8	7.4.25
		Max	2000		-	-				
Z_{diff}, Nominal Differential Impedance	Ohm	Nom	100		-	-			7.2.2.1.9	7.4.22
$C_{ac\ coupling}$ AC Coupling Capacitance	nF	Max	12			12			7.2.2.1.10	7.4.14
$t_{settle,cm}$, Common Mode Transient Settle Time	ns	Max	10			-				7.2.2.3.6
V_{trans}, Sequencing Transient Voltage	V	Min	-2.0			-2.0			7.2.2.1.11	7.4.13
		Max	2.0			2.0				

Table2 - Transmitter Specifications

Parameters	Units	Limit	Electrical Specification						Detail Cross-Ref Section (Serial ATA V. 3.0)	Meas. Cross-Ref Section (Serial ATA V. 3.0)
			Gen1i	Gen1m	Gen1x	Gen2i	Gen2m	Gen2x		
Z_{diffTX}, TX Pair Differential Impedance	Ohm	Min	85		85	-		85	7.2.2.2.1	7.4.22
		Max	115		115	-		115		
$Z_{s\text{-}eTX}$, TX Single-Ended Impedance	Ohm	Min	40						7.2.2.2.2	7.4.23
$RL_{DD11,TX}$, TX Differential Mode Return Loss (All Values Min)	dB	75 MHz-150MHz	14	14	-		-	-	7.2.2.2.3	7.4.1.1
		150 MHz-300 MHz	8	8	-	14	14	-		
		300 MHz-600 MHz	6	6	-	8	8	-		
		600 MHz-1.2 GHz	6	6	-	6	6	-		
		1.2 GHz-2.4 GHz	3	3		6	6	-		
		2.4 GHz-3.0 GHz	1	-		3	3			
		3.0 GHz-5.0 GHz	-	-	-	1		-		
$RL_{CC11,TX}$, TX Common Mode Return Loss (all Values Min)	dB	150 MHz-300 MHz				8	5	-	7.2.2.2.4	7.4.1.1
		300 MHz-600 MHz				5	5	-		
		600 MHz-1.2 GHz				2	2	-		
		1.2 GHz-2.4 GHz				1	1	-		
		2.4 GHz-3.0 GHz				1	1	-		
		3.0 GHz-5.0 GHz				1	-	-		
$RL_{DC11,TX}$, TX Impedance Balance (all values Min)		150 MHz-300 MHz				30	30		7.2.2.2.5	7.4.10
		300 MHz-600 MHz				20	20	-		
		600 MHz-1.2 GHz				10	10	-		
		1.2 GHz-2.4 GHz				10	10	-		
		2.4 GHz-3.0 GHz				4	4	-		
		3.0 GHz-5.0 GHz				4	-	-		

Table 3 – Transmitted Signal Requirements

Parameters	Units	Limit	Electrical Specification						Detail Cross-Ref Section (Serial ATA V.3.0)	Meas. Cross-Ref Section (Serial ATA V.3.0)
			Gen1i	Gen1m	Gen1x	Gen2i	Gen2m	Gen2x		
V_{diffTX}, TX Differential Output Voltage	mVppd	Min	400	400	400	400	400	400	7.2.2.3.1	7.4.4
		Nom	500		-	-				
		Max	600		1600	700		1600		
UI_{VminTX}, TX Minimum Voltage Measurement Interval	UI		-		0.5	0.45-0.55		0.5	7.2.2.3.2	7.4.4
$t_{20-80TX}$, TX Rise/Fall Time	Ps (UI)	Min 20-80%	100 (.15)		67 (.10)	67 (.20)			7.2.2.3.3	7.4.3
		Max 20-80%	273 (.41)		273 (.41)	136 (.41)				
t_{skewTX}, TX Differential Skew	ps	Max	20			20		15	7.2.2.3.4	7.4.12
$V_{cm,acTX}$, TX AC Common Mode Voltage	mVp-p	Max	-			50		-	7.2.2.3.5	7.4.17
$D_{VdiffOOB}$, OOB Differential Delta	mV	Max	-		25	25			7.2.2.3.7	7.4.19
D_{VcmOOB}, OOB Common Mode Delta	mV	Max	-		50	50			7.2.2.3.8	7.4.18
R/F_{bal}, TX Rise/Fall Imbalance	%	Max	-			20		-	7.2.2.3.9	7.4.16
Amp_{bal}, TX Amplitude Imbalance	%	Max	-		10	10			7.2.2.3.10	7.4.15
TJ at Connector, Data-Data, 5UI	UI	Max	0.355		-	-			7.2.2.3.11 7.3	-
DJ at Connector, Data-Data, 5UI	UI	Max	0.175		-	-				
TJ at Connector, Data-Data, 250UI	UI	Max	0.47		-	-				
DJ at Connector, Data-Data, 250UI	UI	Max	0.22		-	-				
TJ at Connector, Clk-Data, $f_{BAUD}/10$	UI	Max	-			0.30		-	7.2.2.3.12 7.3	7.4.7
DJ at Connector, Clk-Data, $f_{BAUD}/10$	UI	Max	-			0.17		-		
TJ at Connector, Clk-Data, $f_{BAUD}/500$	UI	Max	-			0.37		-		
DJ at Connector, Clk-Data, $f_{BAUD}/500$	UI	Max	-			0.19		-		
TJ after CIC, Clk-Data, $f_{BAUD}/1667$	UI	Max	-		0.55	-		0.55		
DJ after CIC, Clk-Data, $f_{BAUD}/1667$	UI	Max	-		0.35	-		0.35		

Table 4 – Receiver Specifications

Parameters	Units	Limit	Electrical Specification						Detail Cross-Ref Section (Serial ATA V. 3.0)	Meas. Cross-Ref Section (Serial ATA V. 3.0)
			Gen1i	Gen1m	Gen1x	Gen2i	Gen2m	Gen2x		
Z_{diffRX}, RX Pair Differential Impedance	Ohm	Min	85			-		85	7.2.2.4.1	7.4.22
		Max	115			-		115		
$Z_{s\text{-}eRX}$, RX Single-Ended Impedance	Ohm	Min	40		-	-			7.2.2.4.2	7.4.23
$RL_{DD11,RX}$, RX Differential Mode Return Loss (all values Min)	dB	75MHz-150MHz	18	18	-	-	-	-	7.2.2.4.3	7.4.1.1
		150 MHz-300 MHz	14	14	-	18	18	-		
		300 MHz-600 MHz	10	10	-	14	14	-		
		600 MHz-1.2 GHz	8	8	-	10	10	-		
		1.2 GHz-2.4 GHz	3	3	-	8	8	-		
		2.4 GHz-3.0 GHz	1	-	-	3	3	-		
		3.0 GHz-5.0 GHz	-	-	-	1	-	-		
$RL_{CC11,RX}$, RX Common Mode Return Loss (all values Min)	dB	150 MHz-300 MHz	-			5	5	-	7.2.2.4.4	7.4.1.1
		300 MHz-600 MHz	-			5	5	-		
		600 MHz-1.2 GHz	-			2	2	-		
		1.2 GHz-2.4 GHz	-			1	1	-		
		2.4 GHz-3.0 GHz	-			1	1	-		
		3.0 GHz-5.0 GHz	-			1	-	-		
$RL_{DC11,RX}$, RX Impedance Balance (all values Min)	dB	150 MHz-300 MHz	-			30	30	-	7.2.2.4.5	7.4.1.1
		300 MHz-600 MHz	-			30	30	-		
		600 MHz-1.2 GHz	-			20	20	-		
		1.2 GHz-2.4 GHz	-			10	10	-		
		2.4 GHz-3.0 GHz	-			4	4	-		
		3.0 GHz-5.0 GHz	-			4	-	-		

Table 5 – Lab-Sourced Signal (for Receiver Tolerance Testing)

Parameters	Units	Limit	Electrical Specification						Detail Cross-Ref Section (Serial ATA V. 3.0)	Meas. Cross-Ref Section (Serial ATA V. 3.0)
			Gen1i	Gen1m	Gen1x	Gen2i	Gen2m	Gen2x		
V_{diffRX}, RX Differential Input Voltage	mVppd	Min	325	240	275	275	240	275	7.2.2.6.1	7.4.5
		Nom	400		-					
		Max	600		1600	750	750	1600		
$t_{20\text{-}80RX}$, RX Rise/Fall Time	ps (UI)	Min 20-80%	100 (.15)		67 (.10)	67 (.20)			7.2.2.6.2	7.4.3
		Max 20-80%	273 (.41)			136 (.41)				
UI_{VminRX}, RX Minimum Voltage Measurement Interval	UI				0.5	0.5			7.2.2.6.3	7.4.5
t_{skewRX}, RX Differential Skew	ps	Max	-		80	50		75	7.2.2.6.4	7.4.12
$V_{cm,acRX}$, RX AC Common Mode Voltage	mVp-p	Max	100		150	100		150	7.2.2.6.5	7.4.9
$f_{cm,acRX}$, AC Common Mode Frequency	MHz	Min	2			2			7.2.2.6.6	7.4.9
		Max	200			200				
TJ at Connector, Data-Data, 5UI	UI	Max	0.43		-				7.2.2.6.7 7.3	-
DJ at Connector, Data-Data, 5UI	UI	Max	0.25		-					
TJ at Connector Data-Data, 250UI	UI	Max	0.6		-					
DJ at Connector Data-Data, 250UI	UI	Max	0.35		-	-				
TJ at Connector, Clk-Data, $f_{BAUD}/10$	UI	Max	-			0.46		-	7.2.2.6.8 7.3	7.4.7 7.4.9
DJ at Connector, Clk-Data, $f_{BAUD}/10$	UI	Max	-			0.35		-		
TJ at Connector, Clk-Data, $f_{BAUD}/500$	UI	Max	-			0.60		-		
DJ at Connector, Clk-Data, $f_{BAUD}/500$	UI	Max	-			0.42		-		
TJ at Connector, Clk-Data, $f_{BAUD}/1667$	UI	Max	-		0.65	-		0.65		
DJ at Connector, Clk-Data, $f_{BAUD}/1667$	UI	Max	-		0.35	-		0.35		

Table 6 – OOB Specifications

Parameters	Units	Limit	Electrical Specification						Detail Cross-Ref Section (Serial ATA V. 3.0)	Meas. Cross-Ref Section (Serial ATA V. 3.0)
			Gen1i	Gen1m	Gen1x	Gen2i	Gen2m	Gen2x		
V_{thresh}, OOB Signal Detection Threshold	mVppd	Min	50		120	75		120	7.2.2.7.1	7.4.20
		Nom	100		-	125		-		
		Max	200		240	200		240		
UI_{OOB}, UI During OOB Signaling	ps	Min	646.67			646.67			7.2.2.7.2	-
		Nom	666.67			666.67				
		Max	686.67			686.67				
COMINIT/ COMRESET and COMWAKE Transmit Burst Length	UI_{OOB}		160			160			7.2.2.7.3	7.4.21
COMINIT/ COMRESET Transmit Gap Length	UI_{OOB}		480			480			7.2.2.7.4	7.4.21
COMWAKE Transmit Gap Length	UI_{OOB}		160			160			7.2.2.7.5	7.4.21
COMWAKE Gap Detection Windows	ns	May detect	35 ^ T < 175			35 ^ T < 175			7.2.2.7.6	7.4.21
		Shall detect	101.3 ^ T ^ 112			101.3 ^ T ^ 112				
		Shall not detect	T < 35 or T _175			T < 35 or T _175				
COMINIT/ COMRESET Gap Detection Windows	ns	May detect	175 ^ T < 525			175 ^ T < 525			7.2.2.7.7	7.4.21
		Shall detect	304 ^ T ^ 336			304 ^ T ^ 336				
		Shall not detect	T < 175 or T _ 525			T < 175 or T _ 525				

6 RELIABILITY

6.1 Error Rate

DVD	$< 10^{-15}$(hard read error)
CD Mode-1 (ECC on)	$< 10^{-12}$ (hard read error)
CD Mode-2 (ECC off)	$< 10^{-9}$ (soft read error)

6.2 MTBF

> 150,000 POH (25% duty cycle, seek, read and write)

6.3 MTTR

< 30 minutes

6.4 Tray Open / Close

> 25,000 times

6.5 Actuator Mechanism

> 2×10^6 Full accesses

7 ENVIRONMENTAL CONDITIONS

7.1 Temperature

PARAMETER	OPERATING	STORAGE	Shipping	UNIT
Temperature	5 ~ 50	-40 to 65	-40 to 65	°C

7.2 Temp. gradient

PARAMETER	OPERATING	STORAGE	Shipping	UNIT
Temperature	20 (Max)	20 (Max)	20 (Max)	°C/hr

7.3 Humidity[xvii]

PARAMETER	OPERATING	STORAGE	Shipping	UNIT
Relative Humidity (non-condensing)	5 to 90	5 to 95	5 to 95	%

7.4 Vibration and Shock

TEST METHOD	Vibration
Operating	Read
	1. 0.35 G o-p (Sine wave, 5~500 Hz, 1 Oct/min, 1 cycle/ axis, no hard error) 2. 0.5Grms (Random, 7~800 Hz, 30 min/axis ;no hard error)
	Write
	0.5 G o-p (Random, 5~500 Hz, no hard error) (30 Min)
Non-operating	1. 2.0 G o-p (Sine wave, 5~500 Hz, 1 Oct/min, no damage) 2. 2.0 Grms (Random, 10~500 Hz, no damage)
TEST METHOD	**Shock**
Operating	Read
	1. 8 G (11ms, half sine wave, disc not starch) 2. 7 G (11ms, half sine wave, no unrecoverable error) 3. 60 G (2ms, half sine wave, no unrecoverable error)(Data only)
	Write
	2 G (11ms, half sine wave, no write error)(20 shocks)
Non-operating	1. 150 G (10ms, half sine wave, no damage) (6 axis, Total of 6 shocks) 2. 50 G (Square wave 180 inch/Sec, no damage) (3 axis, Total of 3 shocks) 3. 200 G (2ms, half sine wave, no damage)(6 axis, Total of 6 shocks)

7.5 Drop

PARAMETER	Weight	Height	UNIT
Drop (1 corner, 3 edges)	14 Kg	76 cm	Packaged
Drop (6 surfaces)	14 Kg	76 cm	Packaged

7.6 Transportation

PARAMETER	Transportation	UNIT
Non-operating Vibration	1.146 Grms (1~200 Hz, 30 minute of each surface, 6 Surface)	Packaged

[xvii] Should under the condition without condensation.

7.7 ESD

PARAMETER	Level A	Level B	Level C	UNIT
Contact discharge	< 4	6	15	KV
Air discharge	< 8	10	20	KV

Level A Normal operation, no degradation, no failures
Level B Some temporary performance degradation allowed, no data lost, self-recoverable, no hardware failures
Level C Temporary performance degradation, recovery by operator is acceptable, no hardware failures

7.8 Acoustic Noise

PARAMETER	Sound Pressure	Sound Power	UNIT
Acoustic Noise(50cm distance)(Bare Drive)	< 48 dB	< 4.9 Bels	dB / Bels
Acoustic Noise(50cm distance)(At System)	< 42 dB	--	

(Condition: Sequential Read, Random Access, Full Stroke Access)
(Media: Normal disc[xviii], 0.25g-mm unbalance disc[xix], 5g-mm unbalance disc[xx])

7.9 Self-Vibration

PARAMETER	Tri-axial resultant		UNIT
	Average	Maximum	
Horizontal orientation	<= 0.17	<= 0.25	Grms
Vertical orientation	<= 0.26	<= 0.30	Grms

(Condition: Sequential Read)
(Media:2.5g-mm unbalance disc[xxi])

[xviii] ABEX TCDR-704
[xix] ABEX SCD-3228
[xx] ABEX TCD-778
[xxi] ABEX SCD-3228 ; DVD5 : SCD-4041

8 AGENCY CERTIFICATES

.UL	UL60950-1, 2nd Edition
.C-UL	CSA C22.2 No.60950-1-07, 2nd Edition
.TUV	EN 60950-1:2006+A11 and EN 60825-1:2007
.DHHS	Federal regulations 21, CFR 1040.10 and 1040.11
.IC	ICES-003 ClassB
. EMC Directive (CE)	EN55022:2006+A1:2007
	EN55024:1998:A1:2001+A2:2003
.CB	IEC 60950-1:2005(2nd Edition)
	IEC 60825-1:2007
.C-Tick	AS/NZS CISPR22:2006 ClassB
. EMC Taiwan (BSMI)	CNS 13438 Class B
. EMC Korea (KCC)	Class B

9 LABEL

9.1 Drive Labels

The "Safety label" and "Serial number label" are located on the top cover.

The "Safety label" contains the following information.

(1) Model Name
(2) Certification marks (UL / cUL, TÜV, IC, CE, C-Tick, Korean EMC, Taiwan EMC)
(3) Certification of DHHS regulations
(4) CLASS 1 LASER PRODUCT label
(5) Danger Notice Information

The "Serial number label" contains the following information.

(1) Manufactured Date: MMMM/YYYY
(2) Serial number
(3) Serial number (Barcode)
(4) F/W + H/W Version

Detail drawing refer from Annex B

9.2 Carton Labels

The Carton label is located on a side wall of the carton box.
The modified "Carton label" contains the following information.

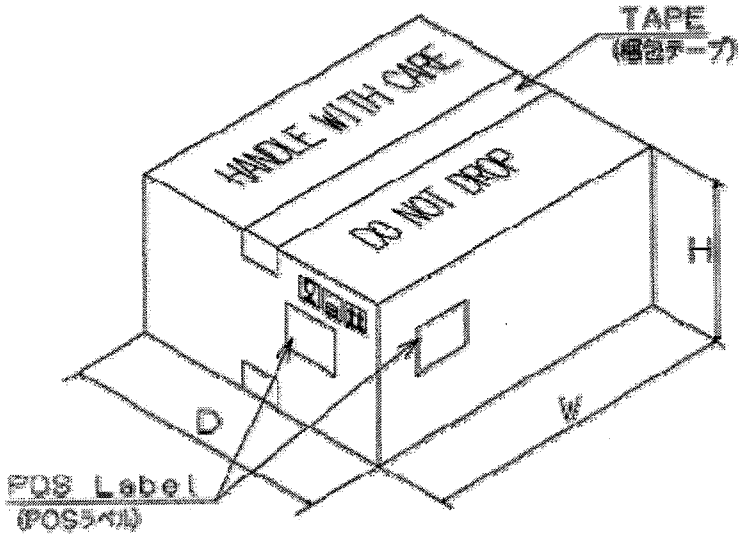

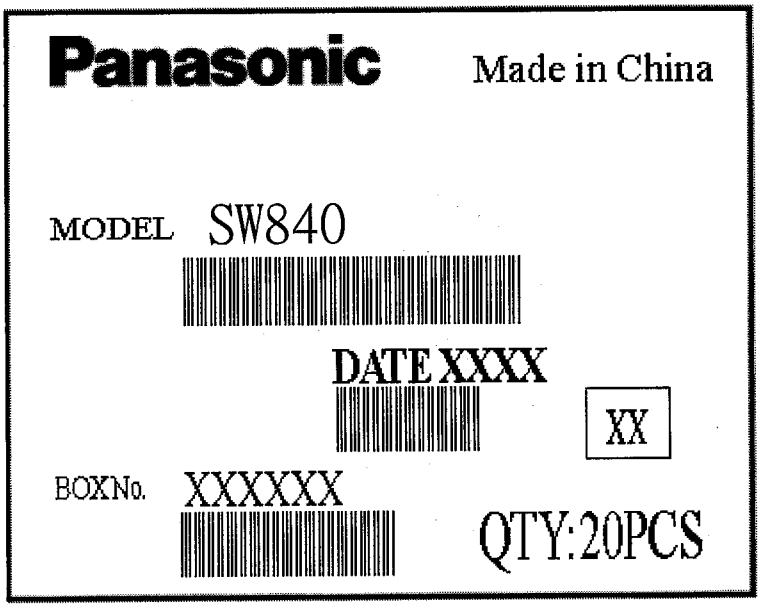

Carton Label

(1) Company Name, Country of origin
(2) Model name and Suffix : SW840XXXXX-X
(3) Model name and Suffix (Barcode)
(4) Manufactured Date, Box Ver.
(5) Manufactured Date (Barcode), Box Ver.
(6) Box No
(7) Box No (Barcode), Drive quantity

10 SHIPPING CONDITIONS

10.1 Carton Box

Outline of carton:
547 mm (L) x 380 mm (W) x 251 mm(H)
20 drives in one package
G.W. per package: 14 kg
(1) Carton
(2) Cushion bottom
2 set per carton
(3) Cushion
1 set per carton
(4) PE bag
20 sets per carton
(5) Optical Drive
20 sets per carton
(6) Cushion top
2 set per carton

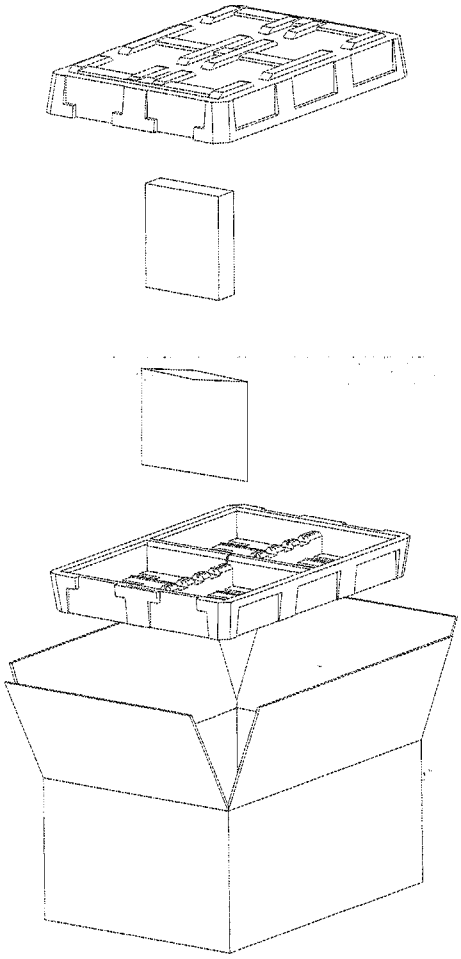

10.2 Shipping Pallet

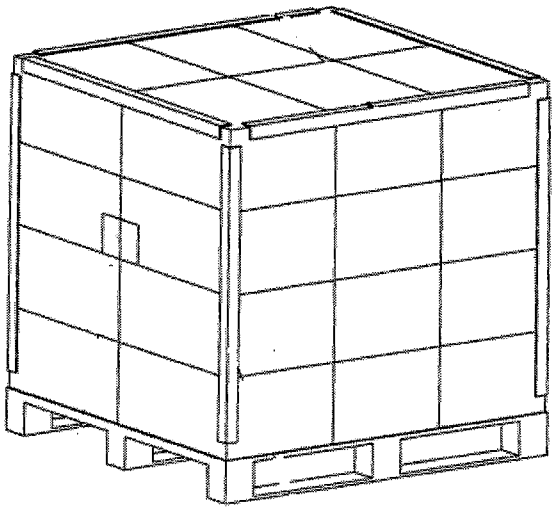

Outline of Road PALLET
115 cm (L) x 110.5 cm (W) x 113.4 cm (H)
480 drives in one PALLET
G.W. per PALLET: 351 kg

11 INFORMATION FOR LASER

SW840 series

Information for the User

This product utilizes a laser.
Use of control, adjustment or performance of procedures other than those specified herein may result in hazardous radiation exposure.
Do not open covers and do not repair yourself. Refer servicing to qualified personnel.

Laser properties of the Drive
Laser Class Class 1 (DHHS and IEC 60825-1)
Wavelength for CD 784 nm
for DVD 658 nm

Location of Labeling

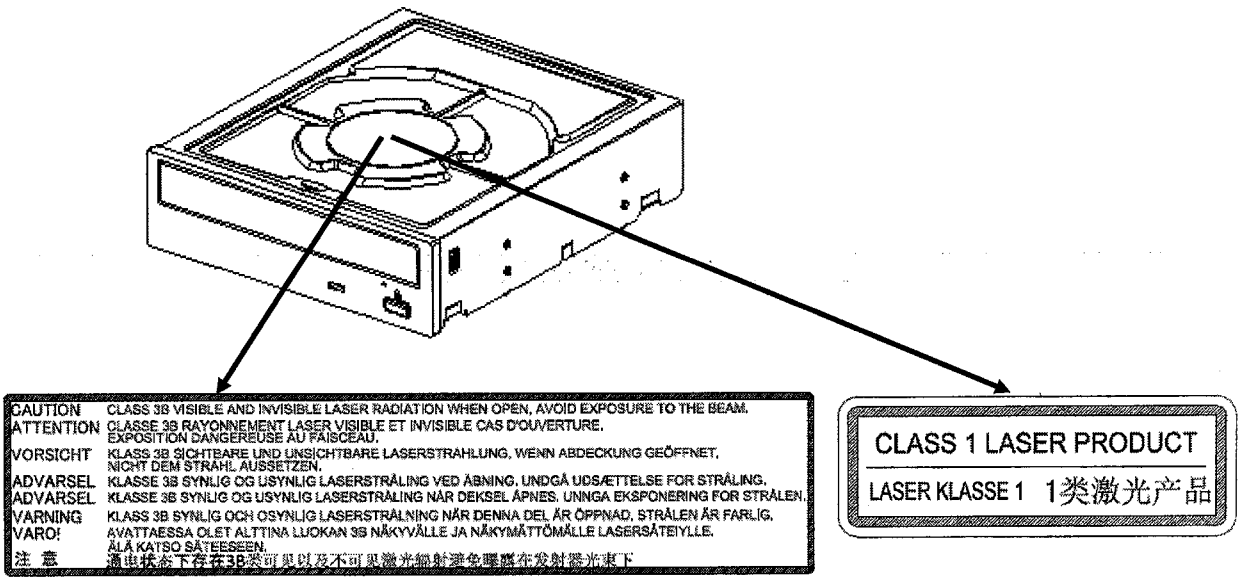

12 ANNEX

12.1 Annex A - Outline Dimensions (unit: mm)

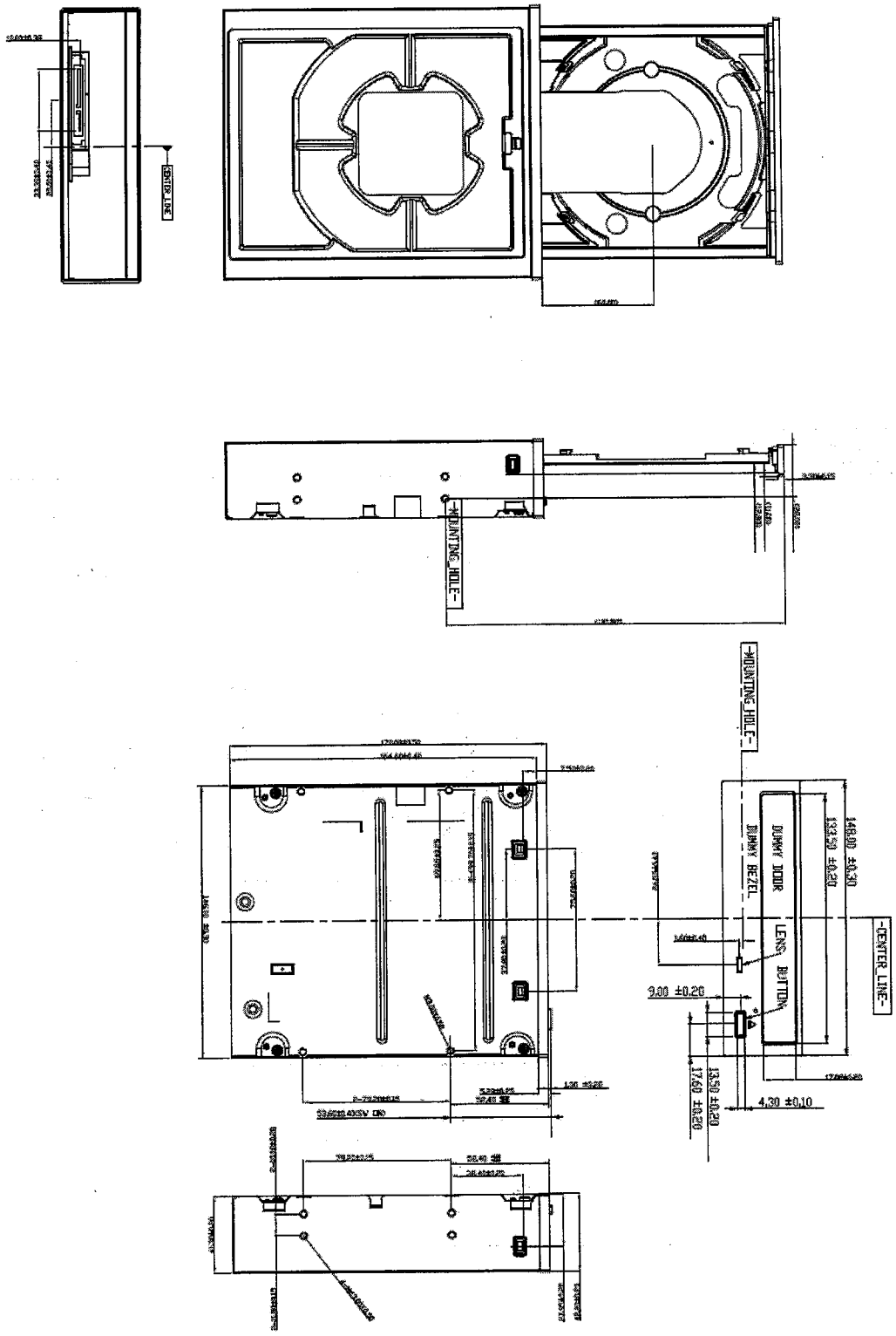

12.2 Annex B – Label

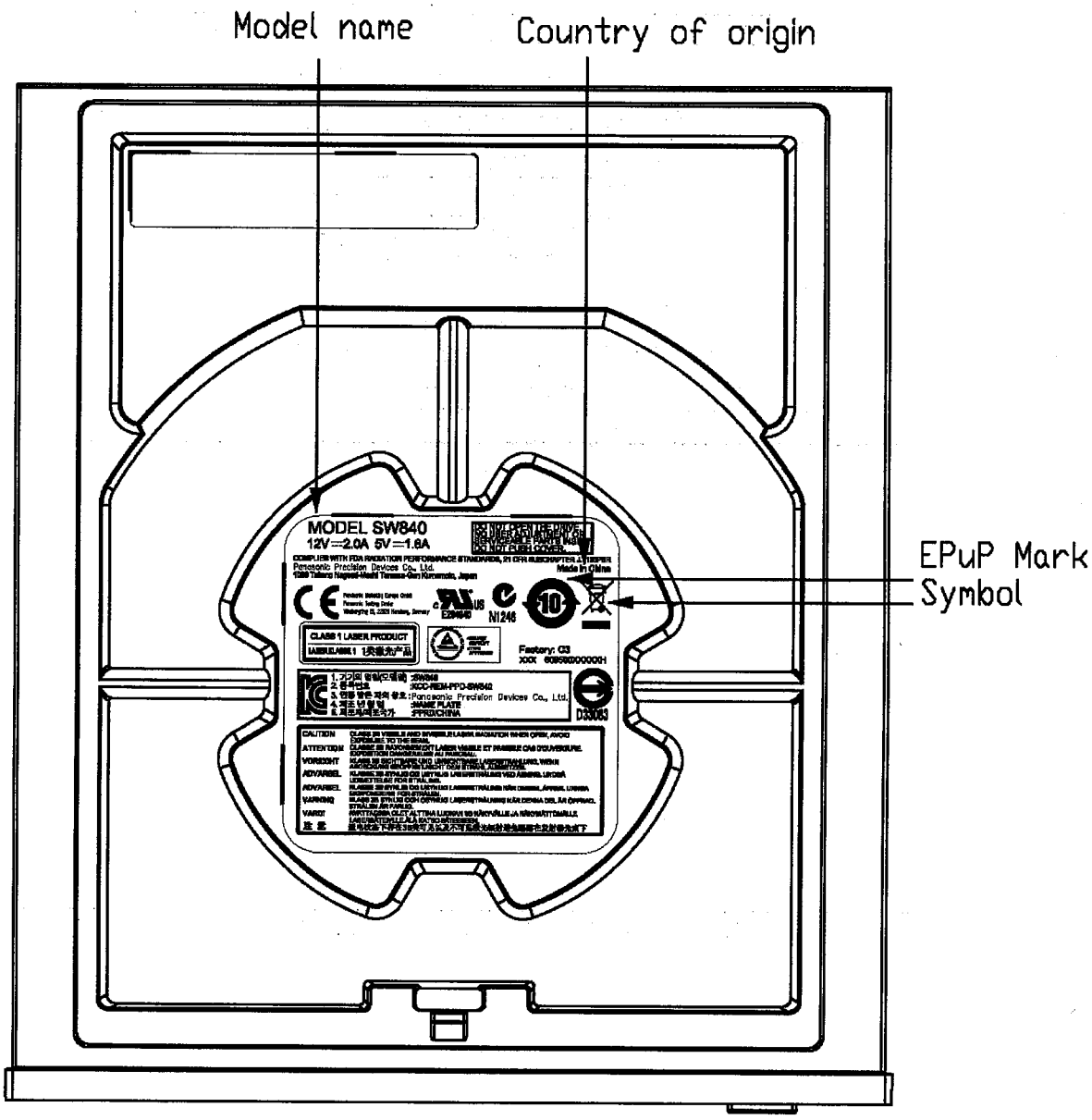

DATEN
COMPUTADORES

PROCURAÇÃO

OUTORGANTE: Daten Tecnologia Ltda, estabelecida na Cidade de Ilhéus - Ba, com sede Rodovia Ilhéus-Uruçuca, KM 3,5, S/N, Galpão, Distrito Industrial, Ilhéus - Bahia, CEP 45.658-335, com seu ato constitutivo devidamente arquivado na Junta Comercial do Estado da Bahia, sob nº 29202372761 em sessão de 27/07/01, inscrita no CNPJ sob nº 04.602.789/0001-01 e Inscrição Estadual nº 55890823NO.

OUTORGADO: Sr. **EDUARDO HAMMES**, portador do RG Nº 622503-2 SSP/SC e CPF Nº 085.956.279-40

OBJETO: Representar a outorgante no **ESTADO DE SANTA CATARINA** exclusivamente em licitações públicas.

PODERES: Representar técnica, jurídica e administrativamente em todas as fases do processo licitatório, apresentar documentação, formular ofertas e lances de preços, assinar propostas e declarações, participar de sessões publicas de habilitação e julgamento, assinar as respectivas atas, registrar ocorrências, formular impugnações, interpor recurso, renunciar ao direito de recurso e assinar todos e quaisquer documentos indispensáveis ao bom e fiel cumprimento do presente mandato, vedado o substabelecimento.

VALIDADE: 90 (noventa) dias.

Ilhéus, Bahia, 11 de novembro de 2014.

José Pacheco de Oliveira Júnior
RG no. 1745693-27 SSP-Ba
Diretor

4º OFÍCIO DE NOTAS
Gustavo Calmon de Amorim - Tabelião
Av. Antonio Carlos, Nº 1806 - Edifício Bomsucesso - 2º Andar - Caminho das Árvores
CEP 41820-020 - Salvador - BA - Fone: (71) 3013-1255 / 3013-1260
FOLHA DE NOTAS
Salvador - Bahia
Reconheco por SEMELHANCA 0001 a(s) assinatura(s) de JOSE PACHECO DE OLIVEIRA JUNIOR (148278) ; ... dou fé. Salvador, 11/11/2014. ... da verdade.
Sela(s) 1604 AB 502563-5 ... FRANCISCA DE SOUZA OLIVEIRA
... em testemunho ( ) ... ESCREVENTE
JOZETE FRANCISCA DE SOUZA OLIVEIRA
Tribunal de Justiça do Estado da Bahia
Selo de Autenticidade
Ato Notarial ou de Registro
1604 AB602563-5
Consulta Selo em www.tjba.jus.br/selo

SALVADOR
Rua Frederico Simões, 125
Ed. Liz Empresarial, 7º andar
Caminho das Árvores
Salvador / BA - CEP: 41820-774
Tel.: + 55 71 3616.5500

ILHÉUS
Rodovia Ilhéus - Uruçúca Km 3,5
S/N - Distrito Industrial Iguape
Ilhéus / BA - CEP: 45658-335
Tel.: +55 73 3222.6222

SÃO PAULO
Rua Quintana, 887 - Conjunto. 54
Brooklin Novo
São Paulo / SP - CEP: 04569-011
Tel.: +55 11 5505.0401